ADTECH
Analog-Digital Technology, Inc.
95 MT. READ BLVD
ROCHESTER, NY 14611
PHONE: 585-698-1845
EMAIL : INFO@ADTECH-INST.COM

PTT 73
Non-Isolated Potentiometer Transmitter
Instruction Manual

1.0 INTRODUCTION

These instructions refer to the above model. Supplementary sheets are attached if the unit has special options or features. For detailed specifications, see page 4 or refer to the Data Bulletin. All ADTECH instruments are factory calibrated and supplied with a label detailing the calibration. Adjustments are normally not necessary. A simple check should be performed to verify calibration before installation to ensure that it matches the field requirement.

2.0 GENERAL DESCRIPTION

The ADTECH PTT 73 is a Non-Isolated Potentiometer Transmitter that accepts a potentiometer input signal of 10 Ω to 10,000 Ω and converts it into any of the standard control signal outputs such as 4-20 ma dc.

Power option P-1 Non-Isolated 24 vdc provides negative output signal and negative DC power common rail connection.

The output is a true current source and provides process signals such as 4-20 ma, 0-1 ma, 0-10 ma, 1-5 ma and 10-50 ma dc or alternatively, a voltage signal of 5 vdc full scale. Other current and voltage **Inputs/Outputs (I/O)** are available as specified on the Data Bulletin.

3.0 INSTALLATION

The instrument is supplied in a general purpose enclosure as standard. NEMA 4, 7 or 12 and plug in chassis enclosures are optionally available. Installation area/location must agree with the supplied instruments including operating temperature and ambient conditions.

Mounting

Refer to the appropriate outline drawing for mounting and clearance dimensions. The instrument is surface mounted with two #10-32 screws on 8.00 inch centers.

Electrical Connections

The wire used to connect the instrument to the control system **I/O** should be a twisted pair(s) and sized according to normal practice. Shielded cable is not normally necessary (if used, the shield must be grounded at terminal 5 of the ADTECH instrument and left floating at the sensor).

A 12 position barrier terminal block with #6-32 screws and 3/8" spacing is provided for **I/O** and power connection. A housing ground terminal marked G is also provided.

Controls

Multiturn ZERO and SPAN controls are provided to calibrate the instrument. The multiturn controls are accessible through the instrument front panel and are clearly marked for ease of use.

4.0 MAINTENANCE

These instruments are electronic and require no maintenance except periodic cleaning and calibration verification. If the unit appears to be mis-operating it should be checked as installed per section 6.0 or removed for a bench check per sections 6.0-7.0. MOST problems are traced to field wiring and/or associated circuits. If the problem appears to be with the instrument, proceed to sections 6.0 and 7.0.

5.0 CONNECTIONS

Standard connections are shown below and on the instrument face plate, Data Bulletin or on attached supplementary sheets.

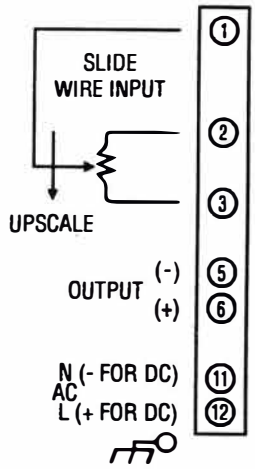

(3-97) 190-A-000006-B

6.0 CALIBRATION

To perform a calibration check or re-calibration of the instrument follow this procedure.

A. Make sure the unit I/O wiring is properly connected and that the correct power source per the label is also connected. The instrument must be at normal power for a minimum of 2 minutes before proceeding to B.

B. The input signal source(s) must be adjustable from 0 to 100% in steps of 10% or at least 25%. The source(s) should be either precalibrated or an accurate meter must be used to monitor the input(s).

C. The output may be monitored either as a direct voltage for a voltage output signal or as a current that can be represented as a voltage across a resistor shunt.

D. Set the input source to minimum input value and adjust the multiturn potentiometer marked ZERO to provide the minimum calibrated output (e.g.) 4.00 ma ± 0.01 ma dc.

E. Set the input source to maximum value and adjust the multiturn potentiometer marked SPAN to provide the maximum calibrated output (e.g.) 20.00 ma ± 0.01 ma dc.

F. Repeat steps D and E until readings are within calibration.

G. The instrument should now be checked at 25-50-75% of span minimum.

H. This completes the calibration.

NOTE:

If recalibration to a different input and/or output signal is required, proceed to the tables listed under section 8.0.

7.0 FIELD TROUBLE SHOOTING GUIDE

This section offers a simple, first level trouble-shooting aid for an apparent instrument malfunction.

SYMPTOM	CORRECTIVE ACTION
No output	1. Check the input and output connections carefully.
	2. Check that the power supply polarity is correct and that power is present on the instrument terminals.
	3. Check that the input source(s) is correct and that it changes magnitude between zero and full scale values when so adjusted.
	4. If the output is a current signal (4-20 ma, etc.), make sure the output loop is complete and that the correct meter range is selected.
	All external checks are complete. Problem seems to be internal.

The following information is provided for a qualified technician or serviceman as check points for use in internal troubleshooting.

CHECKPOINT/ COMPONENT		VOLTAGE/ RANGE
(across)	C9	12 ± 0.6 vdc
(across)	C13	26 ± 4 vdc
(across)	VR1	6.9 ± .35 vdc
(across)	VR2	4.7 ± 0.4 vdc
(across)	R52	0.2 - 1 vdc

8.0 TABLES, PCB LAYOUT

SPAN TABLE

SPAN (OHMS)	J14	J13	J8	J7	J6	J5	ZERO POT RANGE
*3.3 - 6.6	X	X	X	X	X	X	2.0
*6.6 - 10.0	X	X	X	X	X	–	4.0
10 - 20.0	–	X	X	X	X	X	6.6
20 - 40	–	X	X	X	X	–	13.2
40 - 80	–	X	X	X	–	–	26.4
80 - 160	–	X	X	–	–	–	53
160 - 320	–	X	–	–	–	–	100
320 - 640	–	–	X	X	X	X	106
640 - 1300	–	–	X	X	X	–	210
1.3 - 2.5K	–	–	X	X	–	–	420
2.5 - 5.0K	–	–	X	–	–	–	840
5.0 - 10.0K	–	–	–	–	–	–	1600

(X) = Present (–) = Absent

*NOTE: For these ranges change R21 to 301K ohm.

NOTE A: Components as shown may or may not be present on the p.c. board due to design updates or options.

OUTPUT TABLE

OUTPUT SIGNAL FULL SCALE	OUTPUT SHUNT RL	FEEDBACK RES RF
50 ma dc	NONE	20 ohm
20 ma dc	NONE	49.9 ohm
10 ma dc	NONE	100 ohm
1 ma dc	NONE	1K ohm
10 vdc	604 ohm, 1/4 W	49.9 ohm
5 vdc	250 ohm, 1/2 W	49.9 ohm

All selected resistors are 1%, M.F., 1/4 W, 50 PPM, unless otherwise noted.

NOTES:

1. Calculate the ohms value of the input SPAN = (Rmax - Rmin) ohms.
2. Select the appropriate jumpers from the SPAN TABLE and note the corresponding Zero Pot Range value.
3. Calculate the ohms value of the combination (R41, R42) = Rmin(Ω) + 1.1 SPAN (Ω) + (SPANΩ)²/50,000 and install in position.
4. All selected resistors are 1/4W, 1%, 25 PPM.

PTT 73 RL = R56 RF = R54

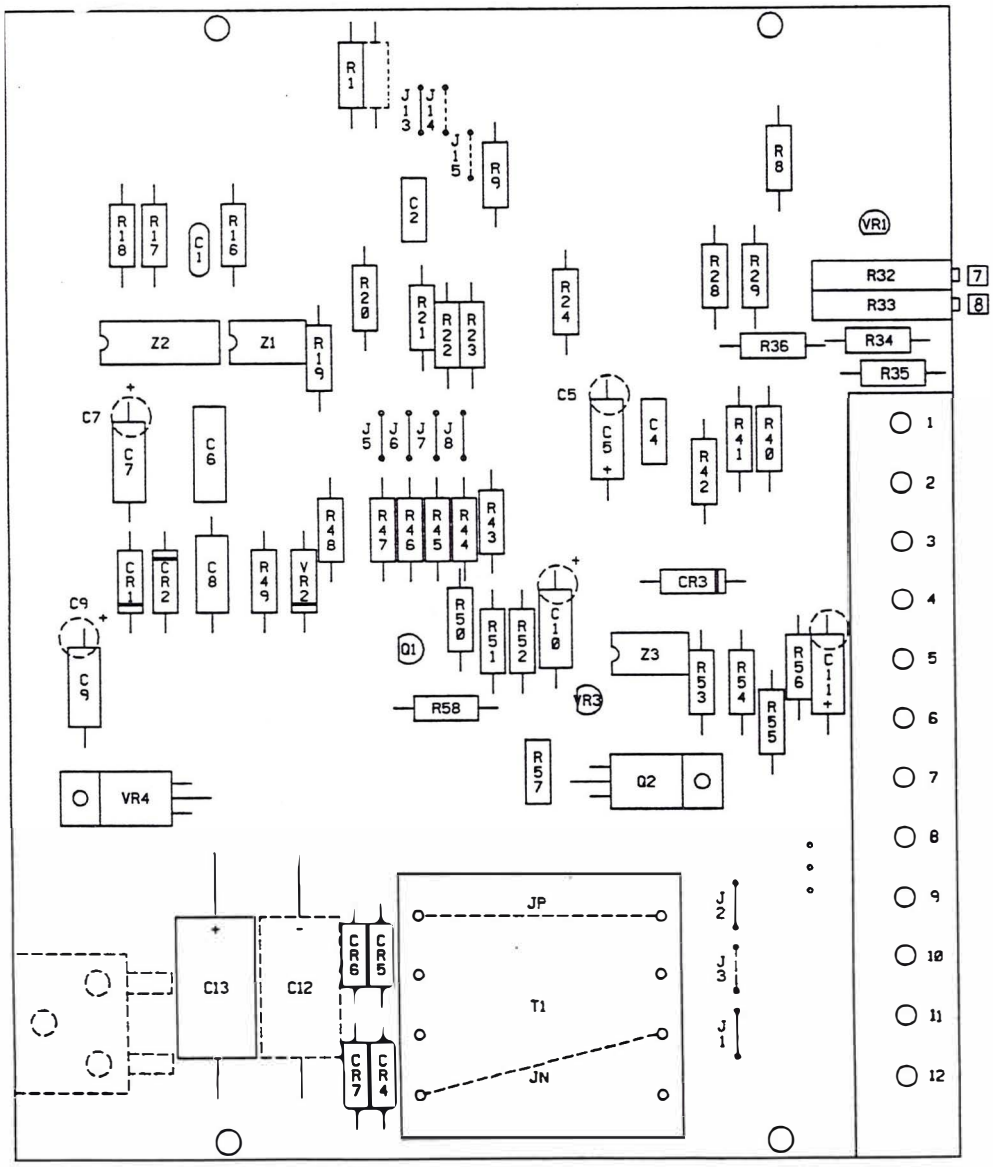

9.0 SPECIFICATIONS

INPUT/OUTPUT

INPUT SIGNALS

a. Potentiometer/slidewire sensors 2 or 3 wire
b. 10 to 10,000 ohm resistance spans: standard
c. 10,000 to 100,000 ohm resistance spans: optional

OUTPUT SIGNALS

	AC Power	DC Power
a. 4-20 ma dc	0-1000 ohms max.	0-900 ohms max.
b. 10-50 ma dc	0-400 ohms max.	0-350 ohms max.
c. 0-1 ma dc	0-20,000 ohms max.	0-18,000 ohms max.
d. 1-5 vdc	250 ohms Z out	250 ohms Z out
e. 0-10 vdc	500 ohms Z out	500 ohms Z out

Zero based current and voltages in the above ranges are standard (e.g.) 0-20 ma, 0-5 vdc. Other voltage and currents optional.

PERFORMANCE

a. **Calibrated Accuracy:** ± 0.1%
b. **Linearity:** ± 0.1% maximum, ± 0.04% typical
c. **Repeatability:** ± 0.05% maximum
d. **Temperature Stability:** ± 0.01%/°F maximum,
± 0.004%/°F typical
e. **Load Effect:** ± 0.01% zero to full load
f. **Output Ripple:** 10 mv P/P maximum
g. **Response Time:** 150 milliseconds
h. **Temperature Range:** 0° to 140°F (-18° to 60°C) operating
-40° to 185°F (-40° to 85°C) storage
i. **Power Supply Effect:** ± 0.05% for a ± 10% power variation

Note: All accuracies are given as a percentage of span

POWER

a. 115 vac: ± 10%, 50/60 Hz, 3 watts, 0.7 Pf (standard)
b. 24 vdc: ± 10% non-isolated, 3 watts (Option P1)
c. 24 vdc: ± 10% isolated, 3 watts (Option P2)
d. 48 vdc: ± 10% isolated, 3 watts (Option P3)
e. 125 vdc: Nominal (105-140 vdc) isolated, 3 watts (Option P4)
f. 230 vac: ± 10%, 50/60 Hz, 3 watts, 0.7 PF (Option P5)

10.0 OUTLINE & MOUNTING